AMETRIX™

Roundel Extra Large

Extra Large Asymmetric Series

COOPER Lighting

AMETRIX

Cooper Lighting is your one source for innovative, architectural lighting solutions. Ametrix™ is Cooper Lighting's architectural asymmetric brand. Its patent pending, segmented optical system utilizes 95% specular aluminum which provides excellent peak candlepower, uniform distribution, and wide lateral spacings. Only Ametrix offers the unique PointGrab™ aiming system to put light precisely where it's needed, and keep it there. Quality materials, construction, and innovative product features complete the package. As with all Cooper Lighting products, Ametrix is backed by Cooper's world-wide network of sales and service professionals.

Architecture doesn't come in one size.

Roundel Extra Large

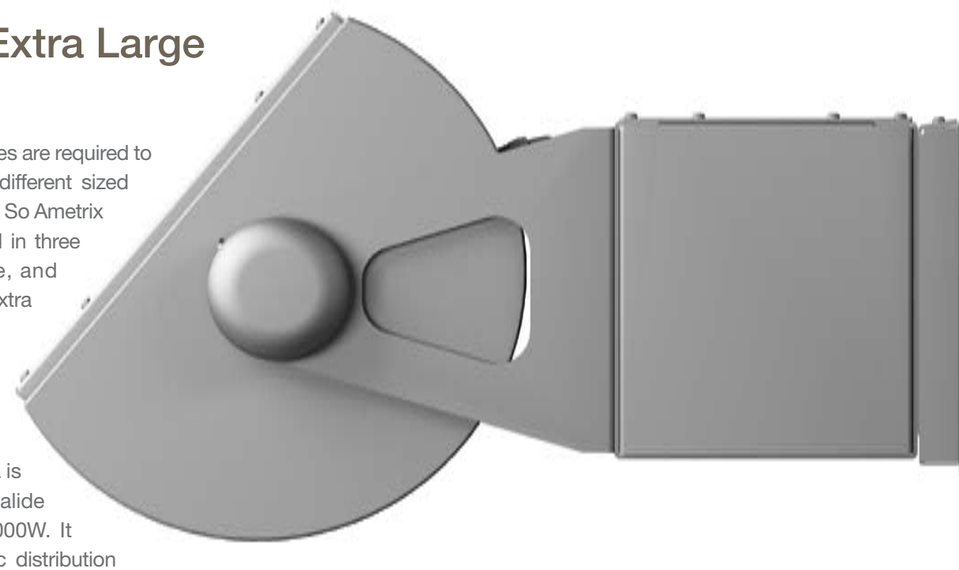

Various lamp wattages are required to meet the needs of different sized architectural spaces. So Ametrix products are offered in three sizes: Small, Large, and the new Roundel Extra Large (XL) series.

Designed for the largest architectural spaces, Roundel XL is available in metal halide lamp sources to 1000W. It provides asymmetric distribution for a variety of applications including indoor sporting facilities, airports, natatoriums, atriums, and other multi-story architectural spaces. Asymmetric distribution allows Roundel XL to be wall or ceiling mounted along the perimeter of a space. This prevents fixtures from becoming obstructions in the space, and it places fixtures at more accessible service points. Perimeter mounting also helps focus attention on the architecture, rather than on the fixtures. In addition to wall and ceiling mounting, Roundel XL is available with 1-way and 2-way pendant mounting, as well as base mounting. Most mounting styles are available with remote or integral ballast.

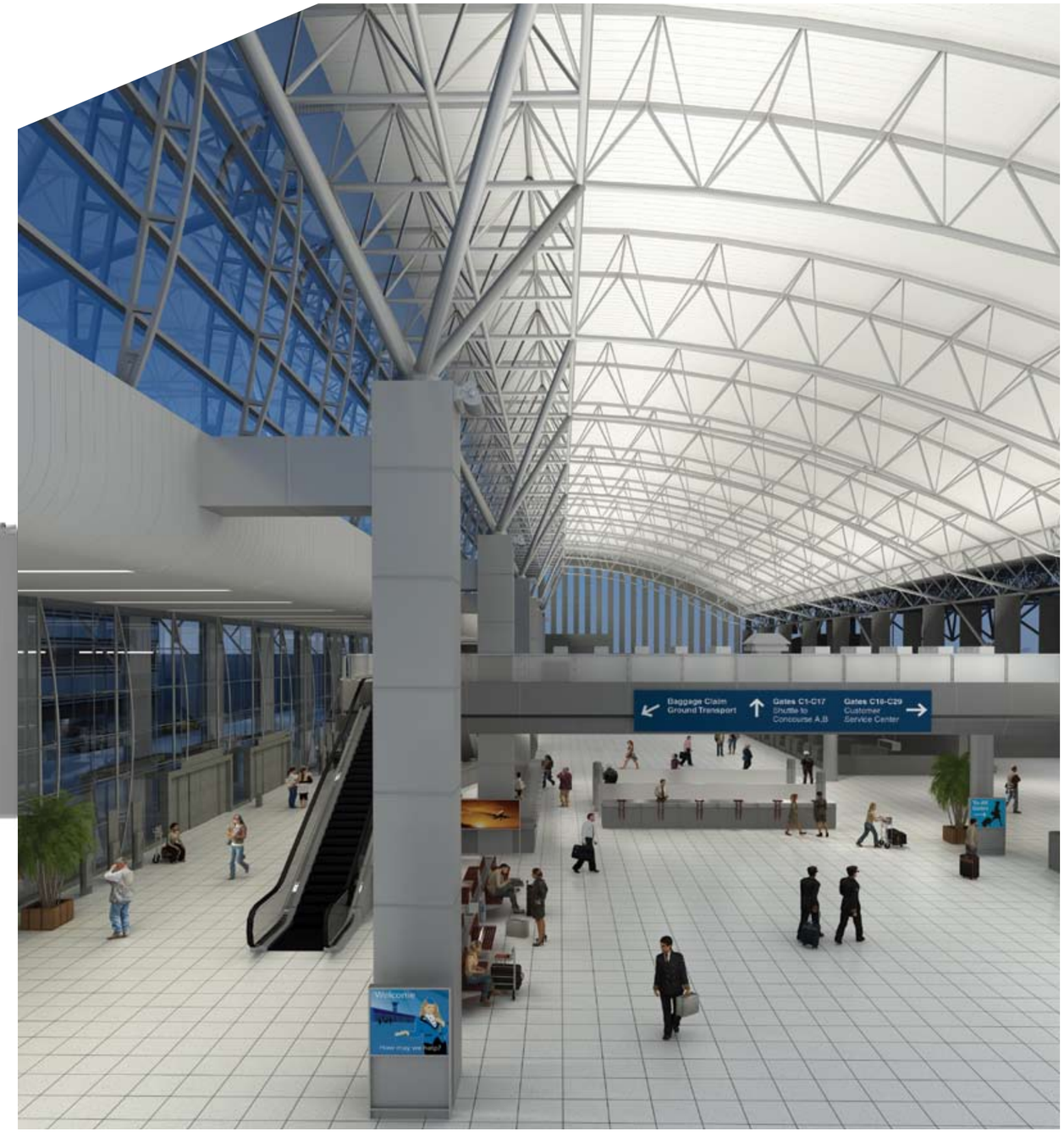

Peak performance – vertically & laterally.

Vertical Distribution

Some manufacturers of asymmetric lighting products use the inside of the housing extrusion as their reflector. While this may reduce the number of fixture parts, it produces a less efficient fixture and, as a result, less light output. All Ametrix fixtures utilize a separate, segmented reflector system constructed from 95% specular aluminum with a dual finish combination. The bottom portion of the reflector is an involute that's made from highly specular material. The involute collects and redirects lamp flux to the upper portion of the reflector, which is a parabola. The parabola, which is constructed from semi-specular material, subtly softens, and then distributes the light outward at 25° above nadir. This unique combination of material + form + finish produces excellent peak candlepower, uniform distribution, and fixture efficiencies as high as 87%.

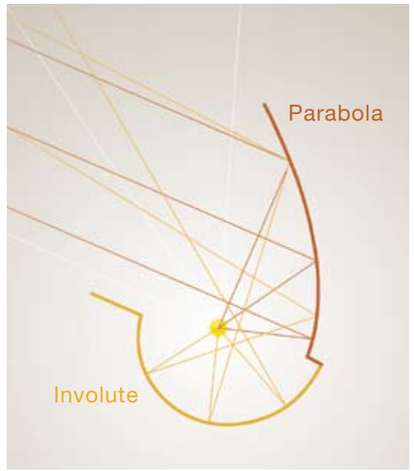

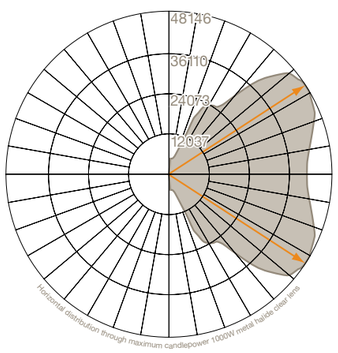

Horizontal Distribution

In addition to excellent peak candlepower and uniform vertical distribution, Ametrix Dual-Peak™ optics provide superior lateral distribution. Broad lateral distribution means wide spacing-to-setback ratios, resulting in the need for fewer fixtures. Fewer fixtures equate to lower installed cost and lower operating costs due to decreased energy usage.

Lamp and Ballast Access

Remove 1 door frame or 2 ballast cover.

Access to lamp or ballast assembly.

Replace lamp.

Quality by design.

Product Features

- Remote or integral Pulse Start ballast to 1000W
- Pulse Start ballast provides quicker start/restrike, longer lamp life, improved lumen maintenance & increased efficacy
- Tempered clear glass lens or micro-prismatic lens
- PointGrab™ aiming system (see page 6 for details)
- Corrosion-resistant type 5052 marine grade aluminum construction
- Segmented, performance optical system (see page 4 for details)
- Multiple mounting styles (see pages 6-7 for details)
- Captive stainless steel fasteners on door frame
- Continuous closed cell silicone gaskets seal out moisture, insects, and other contaminants
- Optional visor available
- Optional louvers available
- Optional quartz restrike
- Small and Large companion fixtures available

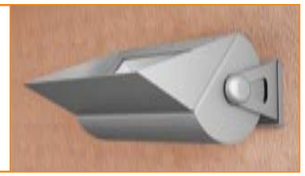

shown with optional visor

Photometrics

Clear lamp data shown with clear lens. Values are initial footcandles. IES files are available at www.ametrixlighting.com.

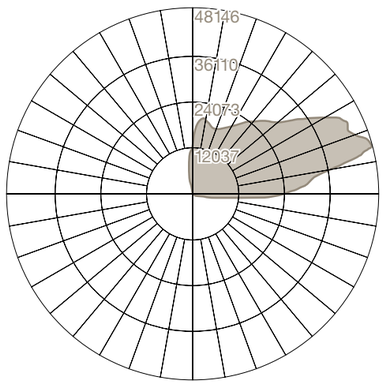

Model: RN-XI-C-1-M-01K
Test Number: P11220
Source: One (1) 1000W Metal Halide – Pulse Start
Lamp: MS1000/U/BT37 clear
Lumens: 120,000
Luminaire Efficiency: 77.2%

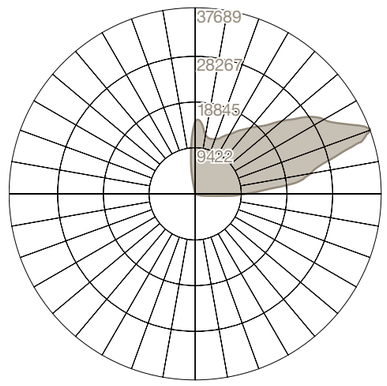

Model: RN-XI-C-2-M-400
Test Number: P11237
Source: Two (2) 400W Metal Halide – Pulse Start
Lamp: (2) MH400/U/BT28 clear
Lumens: 72,000
Luminaire Efficiency: 87.7%

Mounting Versatility

Effectively meeting the many needs of indoor and outdoor architectural spaces requires numerous mounting options. Ametrix provides them all with surface mounting for walls and ceilings, 1-way and 2-way pendant mounting, and base mounting. To keep fixtures as low-profile as possible, remote ballasts are often preferred. But because there isn't always a convenient location to remote mount the ballast, most Ametrix XL series fixtures are available with choice of remote or integral ballast.

YR
Ceiling (remote ballast)

YI03
Wall (integral ballast)

Turn both yoke caps counter-clockwise to remove.

Loosen locking mechanisms.

Adjust to desired angle. Tighten locking mechanisms, replace yoke caps.

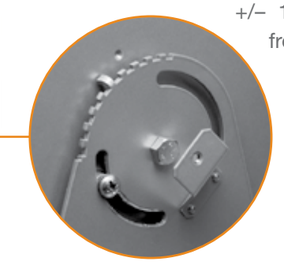

pointGrab™ • Aiming System

To insure proper application, asymmetric fixtures must be accurately aimed and must remain locked in the aimed position. Only Ametrix provides the PointGrab™ lockable aiming system, an easy and intuitive way to aim a single fixture – or hundreds of fixtures – with accuracy and consistency. When the end cap dimple is aligned with the large sprocket (located beneath the removable yoke cover), the angle of the fixture lens is 40° (wall mounted position). This position focuses the maximum candlepower at about 25° above nadir – the optimum asymmetric angle. Each small indicator (located on either side of the large sprocket) represents +/– 10° for precise, consistent aiming from fixture-to-fixture. Tightening or loosening the screw beneath the yoke cover locks or releases the aiming mechanism.

PS
Swivel Pendant (remote ballast)

P1R
1-Way Cluster (remote ballast)

P1I
1-Way Cluster (integral ballast)

P2R
2-Way Cluster (remote ballast)

P2I
2-Way Cluster (integral ballast)

BI03
Base Mount
(integral ballast)

Roundel XL – Remote Ballast

Construction

Housing, doorframe, end caps, and optional cut-off visor are constructed from corrosion-resistant Type 5052 marine grade aluminum. Pendant stems are constructed from 6063-T5 aluminum. Doorframe provides access to gasketed lamp compartment. Hardware is stainless steel.

Optical System

Optical system is constructed from dual-finish anodized aluminum with minimum 94% reflectance.

Aiming System

PointGrab™ adjustable and lockable aiming system is preset at the factory (25° max. cp above nadir). Indicator marks allow for adjustments in increments of +/- 10° for precise, consistent aiming.

Lens

Micro-prismatic tempered glass is standard. Clear tempered glass is also available.

Electrical

Use 90-degree C. supply wire. Provided with E39 Mogul base and Pulse Start Metal Halide ballast for 250W (BT28 or ED28), 400W (BT28 or BT37), 750W (BT37) or 1000W (BT37). Ballast is remote mounted. Lamps not included.

Mounting

Standard canopy mounts over recessed junction box (by others). Support structure by others.

Finish

Luminaire housing is finished using electrostatically applied, polyester powder coat paint. Standard finishes include White, Silver, or Bronze. RAL and custom colors are also available.

Labels

UL and CUL listed for damp locations. Optional wet location listing is available.

Sample Number:

RN – XI – C – 1 – R – 01K – 277 – W – YR

MODEL

RN = Roundel, no visor
RS = Roundel, solid visor

SIZE- INDOOR/OUTDOOR

XI = Extra Large, Indoor
XO = Extra Large, Outdoor

LENS

P = Prismatic
C = Clear

NUMBER OF LAMPS

1 = 1 lamp
2 = 2 lamps (available for 400W only)

LAMP TYPE

P = Metal Halide - Pulse Start
R = Metal Halide - Pulse Start w/ Restrike

WATTAGE

250 = 250W
400 = 400W
750 = 750W
01K = 1000W

VOLTAGE

120 = 120V
277 = 277V
347 = 347V

FINISH

W = White
S = Silver
B = Bronze
C = Custom (specify)

MOUNTING

Select from *'Mounting Options'* on facing page

ACCESSORIES

Select from *'Accessories'* on facing page

Note: Lamps not included

Mounting Options – Remote Ballast

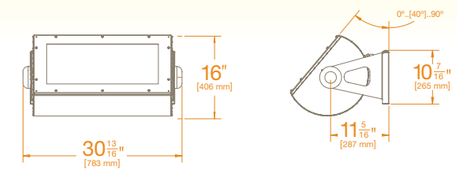

YR

Yoke mount, Remote ballast. For wall or ceiling mounting. Weight: 40 lbs.

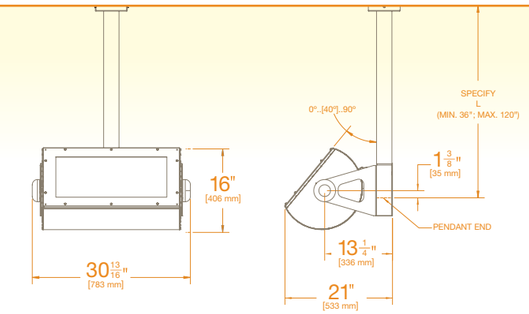

P1R36, P1R72, P1R120

1-way cluster, Remote ballast. For ceiling mounting only. Weight: 62 lbs.

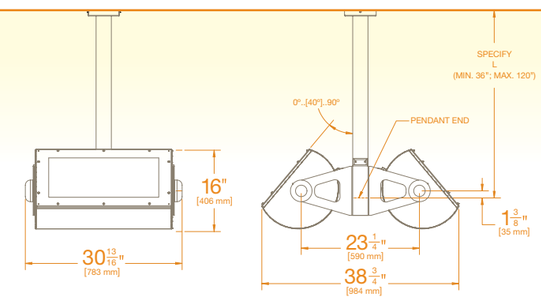

P2R36, P2R72, P2R120

2-way cluster, Remote ballast. For ceiling mounting only. Weight: 87 lbs.

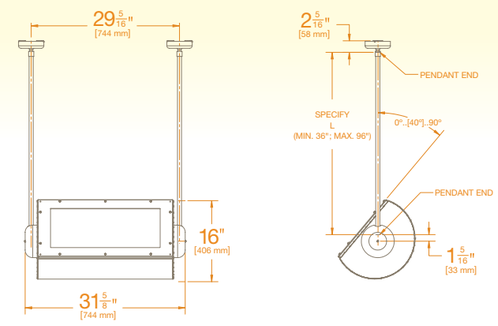

PS36, PS72, PS96

Swivel pendant, remote ballast. For ceiling mouning only. Weight: 47 lbs.

Accessories

L25
25° louver for additional glare control. Must be factory installed.

L45
45° louver for additional glare control. Must be factory installed.

NAT
Suitable for use in natatorium environments. Must be factory installed.

Roundel XL – Integral Ballast

Construction

Housing, doorframe, end caps, and optional cut-off visor are constructed from corrosion-resistant Type 5052 marine grade aluminum. Pendant stems are constructed from 6063-T5 aluminum. Doorframe provides access to gasketed lamp compartment. Hardware is stainless steel.

Optical System

Optical system is constructed from dual-finish anodized aluminum with minimum 94% reflectance.

Aiming System

PointGrab™ adjustable and lockable aiming system is preset at the factory (25° max. cp above nadir). Indicator marks allow for adjustments in increments of +/- 10° for precise, consistent aiming.

Lens

Micro-prismatic tempered glass is standard. Clear tempered glass is also available.

Electrical

Use 90-degree C. supply wire. Provided with E39 Mogul base and Pulse Start Metal Halide ballast for 250W (BT28 or ED28), 400W (BT28 or BT37), 750W (BT37) or 1000W (BT37). Ballast is integral to attached ballast enclosure. Lamps not included.

Mounting

Standard canopy mounts over recessed junction box (by others). Support structure by others.

Finish

Luminaire housing is finished using electrostatically applied, polyester powder coat paint. Standard finishes include White, Silver, or Bronze. RAL and custom colors are also available.

Labels

UL and CUL listed for damp locations. Optional wet location listing is available.

Sample Number:

RN – XI – C – 1 – R – 01K – 277 – W – YI03

MODEL

RN = Roundel, no visor
RS = Roundel, solid visor

SIZE- INDOOR/OUTDOOR

XI = Extra Large, Indoor
XO = Extra Large, Outdoor

LENS

P = Prismatic
C = Clear

NUMBER OF LAMPS

1 = 1 lamp
2 = 2 lamps (available for 400W only)

LAMP TYPE

P = Metal Halide - Pulse Start
R = Metal Halide - Pulse Start w/ Restrike

WATTAGE

250 = 250W
400 = 400W
750 = 750W
01K = 1000W

VOLTAGE

120 = 120V
277 = 277V
347 = 347V

FINISH

W = White
S = Silver
B = Bronze
C = Custom (specify)

MOUNTING

Select from *'Mounting Options'* on facing page

ACCESSORIES

Select from *'Accessories'* on page 9

Note: Lamps not included

Mounting Options – Integral Ballast

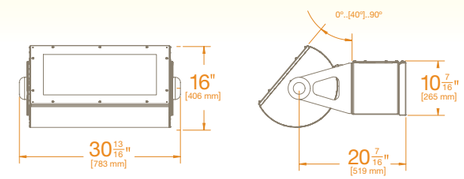

YI03

Yoke mount, Integral ballast. For wall or ceiling mounting. Weight: 80 lbs.

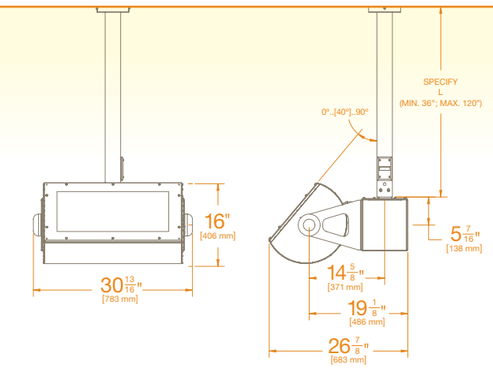

P1I36, P1I72, P1I120

1-way cluster, Integral ballast. For ceiling mounting only. Weight: 92 lbs.

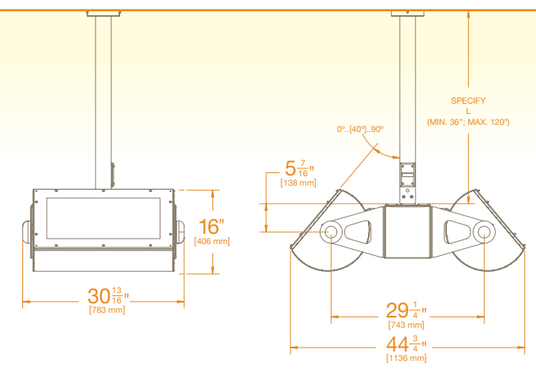

P2I36, P2I72, P2I120

2-way cluster, Integral ballast. For ceiling mounting only. Weight: 152 lbs.

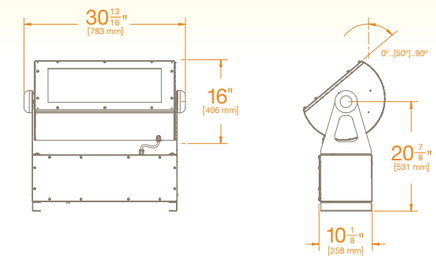

BI03

Base mount, Integral ballast. For base mounting. Weight: 75 lbs.

Companion Luminaires

In addition to the XL series of Extra Large fixtures, Ametrix offers a complete family of Small and Large asymmetric luminaires for use indoors and outdoors. These smaller companion fixtures are available in a variety of lamp wattages and lamp types, including metal halide and ceramic metal halide, compact fluorescent, linear fluorescent, and tungsten halogen. Ametrix also offers two other styles of fixtures: C-Scroll and Vault. Contact you local Cooper Lighting representative for a complete Ametrix product catalog, or visit www.ametrixlighting.com.

Ametrix
4675 Holly Street
Denver, Colorado 80216

P: 303-393-1522
F: 303-393-1477

Cooper Lighting
Customer First Center
1121 Highway 74 South
Peachtree City, GA 30269

P: 770-486-4800
F: 770-486-4801

www.cooperlighting.com

International Sales, USA
Cooper Lighting
1121 Highway 74 South
Peachtree City, GA 30269

P: 770-486-4800
F: 770-486-4801

Canada
Cooper Lighting
5925 McLaughlin Road
Mississauga, Ontario L5R 1B8

P: 905-507-4000
F: 905-568-7049

The Cooper Lighting Family
Halo
Metalux
Lumark
Sure-Lites
Neo-Ray
Corelite
Portfolio
Iris
Shaper
io
Lumière
Invue
McGraw-Edison
Streetworks
Fail-Safe
MWS
DLS
RSA
Ametrix

Domestic Facilities
Cranbury, New Jersey
Elk Grove Village, Illinois
Irving, Texas
Ontario, California
Peachtree City, Georgia

Canadian Facilities
Calgary, Alberta T2E 7V9

Cooper Lighting and Ametrix logos are valuable trademarks of Cooper Industries in the United States and other countries.
You are not permitted to use the Cooper Trademarks without the prior written consent of Cooper Industries.

Cooper Industries, Ltd.
600 Travis, Ste. 5800
Houston, TX 77002-1001
P: 713-209-8400
www.cooperindustries.com

ADY080693

Printed in USA

COOPER Lighting