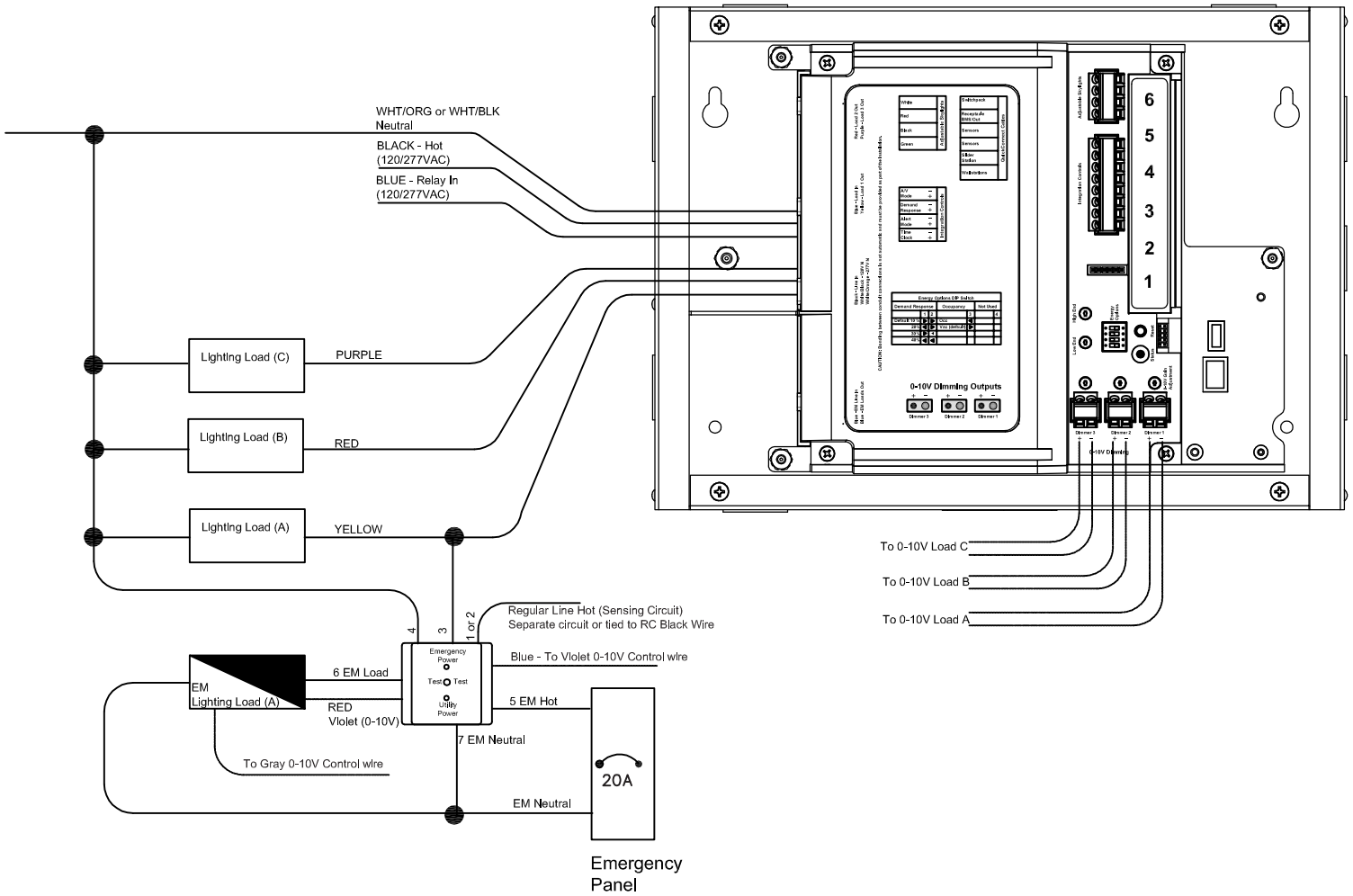

Room Controller and Smart Devices use Click & Go technology:

The Room Controller will automtically recognize any smart device connected with the quick connect cable (provided) and start working immediately upon power up with no programming required.

The Room Controller defaults to Manual On/Automatic Off vacancy sensor mode for maximum energy savings. Wallstations buttons can toggle zones or trigger preset scenes and can be mixed within each wallstation.

ROOM CONTROLLER WIRING DIAGRAM

TITLE: LIGHTING CONTROLS
CEPC-1-D with Room Controller

THE INFORMATION ON THIS DRAWING IS THE PROPERTY OF EATON CORPORATION. IT IS DISCLOSED IN CONFIDENCE AND IS NOT TO BE REPRODUCES, USED, OR DISCLOSED EXCEPT FOR THE PURPOSE FOR WHICH FURNISHES.

DRAWN: M.A.L	DATE: 9/2/14	PROJ:
CH'KD: X.X.	SCALE: NTS	
APPR: X.X.	SHEET: 1/1	DWG #: E#
	SIZE:	

DATE	REV	DESCRIPTION	BY
-	-	-	-
-	-	-	-
-	-	-	-
-	-	-	-
-	-	-	-

REVISION TABLE