Standards Available

MATERIAL	MATERIAL SPECIFICATION	ADVANTAGES
Aluminum	6063-T6 (Side rails, Rungs and Splice Plates) 5052-H32 (Trough Bottoms, Covers and Accessories)	• Corrosion Resistance • Easy Field Fabrication & Installation • Excellent Strength to Weight Ratio • Excellent Grounding Conductor
Steel	ASTM A1011 SS Gr. 33 (14 Gauge Plain Steel) ASTM A1008 Gr. 33 Type 2 (16 & 18 Gauge Plain ASTM A653SS Gr. 33 G90 (Pre-Galvanized)	• Electric Shielding • Finish Options • Low Thermal Expansion • Limited Deflection
Stainless Steel	AISI Type 304 or AISI Type 316 ASTM A240	• Superior Corrosion Resistance • Withstands High Temperatures

Note: Fiberglass available - see page 308

Aluminum

Aluminum cable trays are fabricated from structural grade “copper free” (marine grade) aluminum extrusions. Aluminum’s excellent corrosion resistance is due to its ability to form an aluminum oxide film that when scratched or cut reforms the original protective film. Aluminum has excellent resistance to "weathering” in most outdoor applications. Aluminum cable tray has excellent corrosion resistance in many chemical environments and has been used for over thirty years in petro-chemical plants and paper mills along the gulf coast from Texas to Florida. Typically, aluminum cable trays can perform indefinitely, with little or no degradation over time, making it ideal for many chemical and marine environments. The resistance to chemicals, indoor and outdoor, can best be determined by tests conducted by the user with exposure to the specific conditions for which it is intended. For further information, contact Cooper B-Line or the Aluminum Association.

Some common chemicals which aluminum resists are shown on pages 22 & 23.

Aluminum Cable Tray

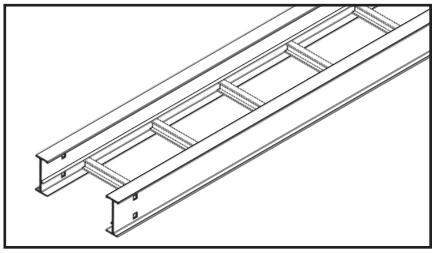

Steel

Steel cable trays are fabricated from continuous roll-formed structural quality steel. By roll-forming steel, the mechanical properties are increased allowing the use of a lighter gauge steel to carry the required load. This reduces the dead weight that must be carried by the supports and the installers. Using structural quality steel, Cooper B-Line assures that the material will meet the minimum yield and tensile strengths of applicable ASTM standards. All cable tray side rails, rungs and splice plates are numbered for material traceability. The corrosion resistance of steel varies widely with coating and alloy.

Steel and Stainless Steel Cable Tray

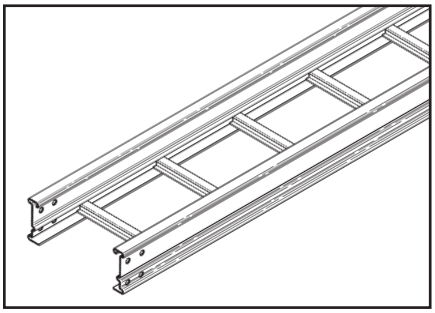

Note:

For help choosing proper cable tray material, see Cooper B-Line Technical Paper Series.
(bline.com/engineer/Technical.asp)

Stainless Steel

Stainless Steel cable trays are fabricated from continuous roll-formed AISI Type 304 or AISI Type 316/316L stainless steel. Both are non-magnetic and belong to the group called austenitic stainless steels. Like carbon steel, they exhibit increased strength when cold worked by roll-forming or bending.

Several important conditions could make the use of stainless steel imperative. These include long term maintenance costs, corrosion resistance, appearance and locations where product contamination is undesirable. Stainless steel exhibits stable structural properties such as yield strength and high creep strength at elevated temperatures.

Cooper B-Line’s stainless steel cable trays are welded using stainless steel welding wire to ensure each weldment exhibits the same corrosion resistant characteristic as the base metal. Localized staining in the weld area or heat affected zone may occur in severe environments. Specialized shielding gases and low carbon materials are used to minimize carbon contamination during welding and reduce staining and stress corrosion. Specify passivation after fabrication per ASTM A380 to minimize staining, improve aesthetics and further improve corrosion resistance.

A detailed study of the corrosive environment is recommended when considering a stainless steel design (see pages 22 & 23).

Standards Available

FINISH	SPECIFICATION	RECOMMENDED USE
Electrogalvanized Zinc	ASTM B633 (For Cable Tray Hardware and Accessories, Alum. and Pre-Galv.) (For Flextray Standard is B633 SC2)	Indoor
Chromium Zinc	ASTM F-1136-88 (Hardware for Hot Dip Galvanized Cable Tray)	Indoor/Outdoor
Pre-Galvanized Zinc	ASTM A653SS Gr.33 G90 (CSA Type 2) (Steel Cable Tray and Fittings)	Indoor
Hot Dip Galvanized Zinc After Fabrication	ASTM A123 (CSA Type 1) (Steel Cable Tray and Fittings)	Indoor/Outdoor
Special Paint	Per Customer Specification (Aluminum or Steel Cable Tray & Fittings)	Indoor

Zinc Coatings

Zinc protects steel in two ways. First it protects the steel as a coating and second as a sacrificial anode to repair bare areas such as cut edges, scratches, and gouges. The corrosion protection of zinc is directly related to its thickness and the environment. This means a .2 mil coating will last twice as long as a .1 mil coating in the same environment.

Galvanizing also protects cut and drilled edges.

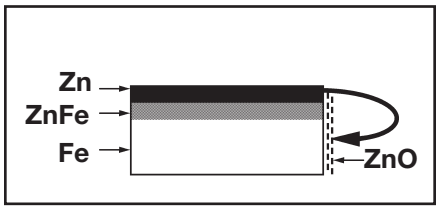

Electrogalvanized Zinc

Electrogalvanized Zinc (also known as zinc plated or electroplated) is the process by which a coating of zinc is deposited on the steel by electrolysis from a bath of zinc salts. This finish is standard for cable tray hardware and some accessories for aluminum and pre-galvanized systems.

A rating of SC3, B-Line's standard, provides a minimum zinc coating thickness of .5 mils (excluding threaded rod, which is SC1 = .2 mils)

When exposed to air and moisture, zinc forms a tough, adherent, protective film consisting of a mixture of zinc oxides, hydroxides, and carbonates. This film is in itself a barrier coating which slows subsequent corrosive attack on the zinc. This coating is usually recommended for indoor use in relatively dry areas, as it provides ninety-six hours protection in salt spray testing per ASTM B117.

Chromium/ Zinc

Chromium/ Zinc is a corrosion resistant composition, which was developed to protect fasteners and small bulk items for automotive use. The coating applications have since been extended to larger parts and other markets.

Chromium/Zinc composition is an aqueous coating dispersion containing chromium, proprietary organics, and zinc flake.

This finish provides 1000 hours protection in salt spray testing per ASTM B117, exceeding NEMA VE-1 requirements by 300%.

Pre-Galvanized Zinc

(Mill galvanized, hot dip mill galvanized or continuous hot dip galvanized)

Pre-Galvanized steel is produced by coating coils of sheet steel with zinc by continuously rolling the material through molten zinc at the mills. This is also known as mill galvanized or hot dip mill galvanized. These coils are then slit to size and fabricated by roll forming, shearing, punching, or forming to produce B-Line pre-galvanized cable tray products.

The G90 specification calls for a coating of .90 ounces of zinc per square foot of steel. This results in a coating of .45 ounces per square foot on each side of the sheet. This is important when comparing this finish to hot dip galvanized after fabrication.

During fabrication, cut edges and welded areas are not normally zinc coated; however, the zinc near the uncoated metal becomes a sacrificial anode to protect the bare areas after a short period of time.

To further insure a quality product, B-Line welds all pre-galvanized cable trays with a silicon bronze welding wire allowing only a small heat affected zone to be exposed. This small area quickly repairs itself by the same process as cut edges.

Hot Dip Galvanized After Fabrication

(Hot dip galvanized or batch hot dip galvanized)

Hot Dip Galvanized After Fabrication cable tray products are fabricated from steel and then completely immersed in a bath of molten zinc. A metallic bond occurs resulting in a zinc coating that completely coats all surfaces, including edges and welds.

Another advantage of this method is coating thickness. Cable, trays hot dip galvanized after fabrication, have a minimum thickness of 1.50 ounces per square foot on each side, or a total 3.0 ounces per square foot of steel, according to ASTM A123.

The zinc thickness is controlled by the amount of time each part is immersed in the molten zinc bath as well as the speed at which it is removed. The term "double dipping" refers to parts too large to fit into the galvanizing kettle and, therefore, must be dipped one end at a time. It does not refer to extra coating thickness.

The layer of zinc which bonds to steel provides a dual protection against corrosion. It protects first as an overall barrier coating. If this coating happens to be scratched or gouged, zinc's secondary defense is called upon to protect the steel by galvanic action.

Hot dip galvanized after fabrication is recommended for prolonged outdoor exposure and will protect steel for many years in most outdoor environments and in many aggressive industrial environments (see charts on page 20).

Standards Available

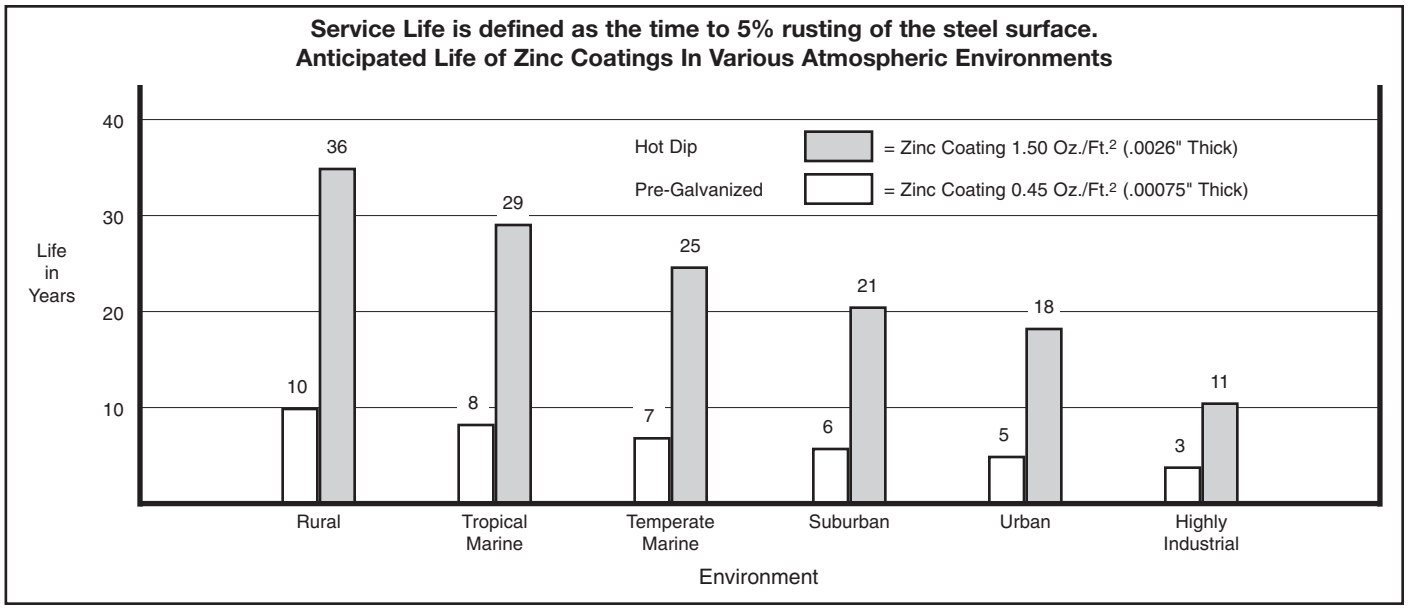

PVC Coating

PVC coating aluminum or steel cable tray is not recommended and has been removed from Cooper B-Line's cable tray line.

The application of a 15 mil PVC coating to aluminum or steel cable tray was a somewhat popular finish option 15 or more years ago. The soft PVC coating must be completely intact for the finish to be effective. In a caustic atmosphere, a pinhole in the coating can render it useless and corrode the cable tray. The shipment of the cable tray consistently damages the coating, as does installation. The splice hardware, splice plates and ground straps require field removal of the coating to ensure connections. PVC coated cable tray drastically increases the product's cost and delivery time.

Cooper B-Line recommends using fiberglass - See Fiberglass section, or stainless steel cable tray systems in highly corrosive areas.

Painting Cable Tray

Cooper B-Line offers painted cable tray to any color specified by the customer. It is important to note that there are key advantages and disadvantages to ordering factory painted cable tray. Cooper B-Line typically does not recommend factory painted cable tray for most applications.

Painted cable tray is often used in "open ceiling" applications, where all the overhead equipment and structure is painted the same color. In this type of application, additional painting is often necessary in the field, after installation, to ensure all of the supporting components, such as hanger rods, clamps and attaching hardware have been painted uniformly. Pre-painted cable tray interferes with common grounding practices, requiring the paint to be removed at splice locations, and/or the addition of bonding jumpers that were otherwise unnecessary. This additional field modification not only increases the installation cost, but causes potential damage to the special painted finish.

It is typically more cost effective to use an Aluminum or Pre-Galvanized Steel cable tray and paint it after installation, along with the other un-painted building components. Consult painting contractor for proper surface preparation.

Special Paint

B-Line cable tray and supports can be painted or primed to meet the customers requirements. Cooper B-Line has several colors available, consult the factory.

If a non-standard color is required the following information needs to be specified:

1. Type of material preparation (primer, etc.)
2. Type of paint, manufacturer and paint number or type of paint with chip.
3. Dry film thickness.

Material/Finish Prefix Designation Chart

Catalog Number Prefix	Material to be Furnished
A	Aluminum
P	Pre-Galvanized
G	Hot Dip Galvanized
ZN	Zinc Plated
S	Plain Steel
SS4	Type 304 Stainless Steel
SS6	Type 316 Stainless Steel